SOW ANNEXURE B DDM SERVICES BACKGROUND

Section 1 – Introduction

1. BACKGROUND

1.1 The DDM services suite utilise the Identity Bridge COTS product and SQL products with extensive Defence scripting to provide the following services:

a. **Defence Identity Service (DIS)**: the central point for the registration, management and historical auditing of unique Defence Digital Identities. This is the authoritative source used by Certificate Services and access management services used across Defence networks.

b. **Defence Corporate Directory (DCD)**: The Directory provides a single point of aggregated authoritative Defence information. Using the DCDWEB, a web dotnet frontend, allows Defence Users ability to search. Defence application can also access the DCD information via approved connections. The Directory also provides information that is used by Military Messaging.

c. **Pegasus Directory Service (PDS)**: part of the DCD Service, which supports external Partners. This service is primarily executed in the Secret environment but expanding to Protected. The PDS service allows subsets of data to be shared with the 5eyes Partner Nations (CAN, GBR, NZL, and USA).

d. **Data Exchange Service**: provides the Department of Defence with the business capability to manage the migration, integration, and matching of data across multiple environments and systems. Using data synchronisation tools, Identity Bridge (IB) and SQL Server Integration Services (SSIS), the required data is: Extracted from the source; Manipulated; and Inserted into a destination for client use.

e. **Address Book Sync (ABSYNC) Service**: ABSYNC service supports Defence-Wide mail through the synchronisation of mail objects and directory data between internal and external mail systems, as well as publishes mail system entries into the Defence Corporate Directory.

f. **User Info Provisioning (UIP) Service**: provides the strategic Active Directories (DPE/DSE) update information for their users.

g. **AD List/group management (ADDL) Service**: provides strategic Active Directories (DPE/DSE) by managing Distribution Groups/Group membership based on attributes not held by the active Directories.

1.2 In addition to the above, the following DDM has the following intranet pages that require updates and management:

a. DCD Administration

b. Directory & Data Management

2. GOVERNANCE

2.1 Responsibility for maintaining the DDM services suite lies with the Directorate of Digital Identity Services (DDIS) within Enterprise Technology Operations Branch (ETOB).

2.2 The System Owner is the Assistant Secretary Enterprise Technology Operations (ASETO). The Business Owner is First Assistant Secretary (FAS) People Services within Defence People Group.

3. SYSTEM INFORMATION

3.1 System Description

3.1.1 The primary functionalities of the Services are:

a. Middleware: ViewDS Identity ridge, Microsoft SQL Integration Services

b. Databases: SQL Database Instances x3

c. Operational System: Windows 2003/2012/2016/2019, RHEL

d. Infrastructure Services: Time, Certificate Services, Defence DNS, Global Switch Load Balancer (GSLB), Dynatrace, Nagios, Microsoft IIS Services

e. Virtualisation: Platform Service manage the OS Layer for host/storage

f. Network: the services are firewalled protected VLAN to isolate DDM hosts. Coordination to access client DC's and AUG also include other firewalls.

3.2 System Interfaces

3.2.1 The DDM services suite are present on the following domains:

a. DSE – Production domain users

b. DSESIT – Test domain users

c. DSEDEV – Dev domain users

d. AUG – Production Domain

e. DPE – Production domain users

f. DPESIT – Test domain users

g. DPEDEV – Dev domain users

3.2.2 The DDM services suite interfaces with a number of external extant Defence systems and assets, including but not limited to:

a. Active Directory (AD): DPE/DSE, DST, DIE, FIE, FIS

b. Partner Border Directory Service Agents (BDSA)

c. Simple Mail Transfer Protocol (SMTP)

d. Security Information and Event Management (SIEM)

e. Military Messaging (MMHS)

f. Defence Service Management System (DSMS)

g. Service Now

h. Objective

i. PMKeyS (CDI)

j. AGSVA

Section 2 - Application Services

4. OPERATIONS, MAINTENANCE, AND SUPPORT

4.1 Level Zero support is provided by DCD help pages and DSMS Knowledge Articles. The Defence ICT Service Desk provides Level One support. Level Two and Three DDM services support is provided by the DDM sustainment team (being procured under this approach to market). Infrastructure support for DDM is provided under other service towers/teams/contracts. Level Four support for DDM software/frameworks is provided where applicable by the manufacturer.

4.2 The DDM services suite is classified as a Service Class 3 (SC3) application supported by Centralised Processing (CP) as per the below agreed support timeframes:

Item	SC3
Support Hours	24x7x365
Availability	99%
Operational Recovery Time Objective (ORTO)	< 24 Hours
Operational Recovery Point Objective (ORPO)	< 10 Minutes
Mean Time To Restore Service (MTRS)	< 88 Hours
Mean Time Between Failures (MTBF)	8,760 Hours
System Maintenance	N, N-1 Release Latest Patches
DR Time Objective	< 48 Hours

Table 1: Support Timeframes

5. APPLICATION SUPPORT

5.1 Defence Identity Service (DIS)

5.1.1 The Defence Identity Service (DIS) provides the Department of Defence with a central point of registration, management and historical information of the unique ICT Identity. This can be authoritatively used any ICT Application across both Protected and Secret Networks for:

a. People entities are managed on Protected for both Protected and Secret

b. Non Person Entity (Generic or Functional Roles) are managed primarily on Protected but can also be done on Secret.

5.1.2 The Digital Identity is managed within the Everybody Database (EBDB) based on authoritative data from the HR Systems (PMKeyS and ODS). The EBDB manages the unique digital identity to prevent duplication and to provide a perpetual authoritative record of the digital identity.

5.1.3 The information used to create the unique Identity is based on the correct authoritative source, which for people are:

a. Human Resources (HR) system, PMKeyS. This is managed by Defence People Group and is updated once a day (morning).

b. Other Defence Support (ODS) system. This is an interim system managed by DDIS for those Identities not managed by PMKeyS. It is updated in real time.

5.1.4 People can be grouped into two groups:

a. PMKeyS Managed – this can include

(i) Department of Defence APS/ASD/ASA

(ii) AUS military

(iii) Some attached foreign military

b. Non PMKeyS Managed

(i) Third Party Employees

(ii) AUS APS (from other government Departments)

(iii) External Service Providers (ESP)

(iv) Professional Services Providers (PSP)

(v) Contractors

(vi) Volunteers

(vii) Foreign Military (those not recorded in PMKeyS).

5.1.5 The ICT unique Identity is based on two criteria an email address and a related employee number. This does allow for a person with multiple employments (eg. APS, Reservist) to have two active unique Identities. The service has the following functions:

a. Create identity when not already present and set as active.

b. Update identity when changes occur in PMKeyS or ODS information. E.g. preferred name.

c. Deactivate identity when PMKeyS or ODS indicates Identity is inactive.

5.1.6 A history of changes is kept to allow auditing of relationship between: @defence.gov.au value and the EmployeeNumber value.

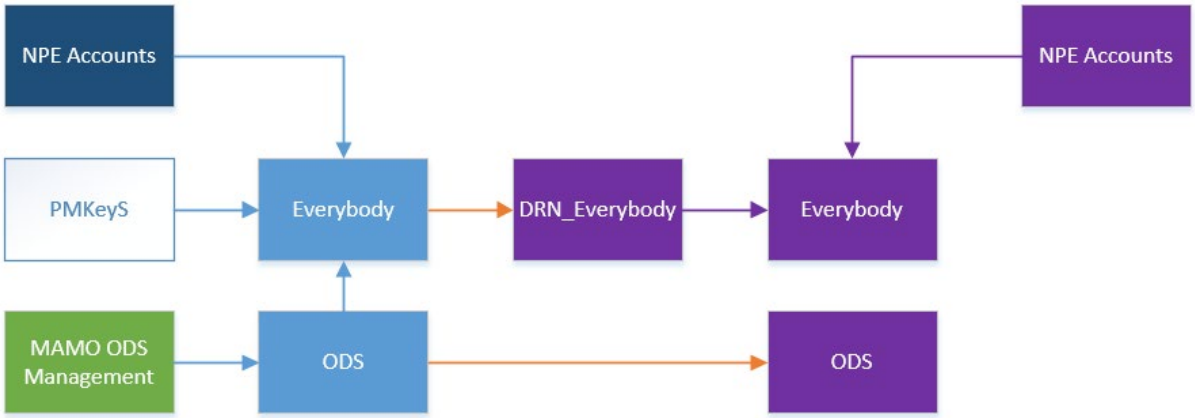

Figure 1: Defence Identity Service Overview

5.2 Defence Corporate Directory (DCD)

5.2.1 The DCD Services provides a single point of aggregated information across defence environments (Figure 2). It provides to Defence Clients (Figure 3):

a. An Intranet web interface for Users, which allows directory search for contact information of Defence personnel and Functional Contacts. Information provided is controlled by underlying network.

b. Access to Information to meet Application specific requirements, utilising Secure LDAP, LDAPS, and LDAP protocols.

c. Authentication Service for AUG based gateways.

d. Hosts the Military Messaging Service (MMHS) Application information; where the DCD (Low) is the authoritative location for the information, and the data is replicated to the DCD (High). The MMHS DAMS component has write access to the DCD (Low) to make any change to MMHS information.

e. Target system for incoming external data, such as the Pegasus Partner address books.

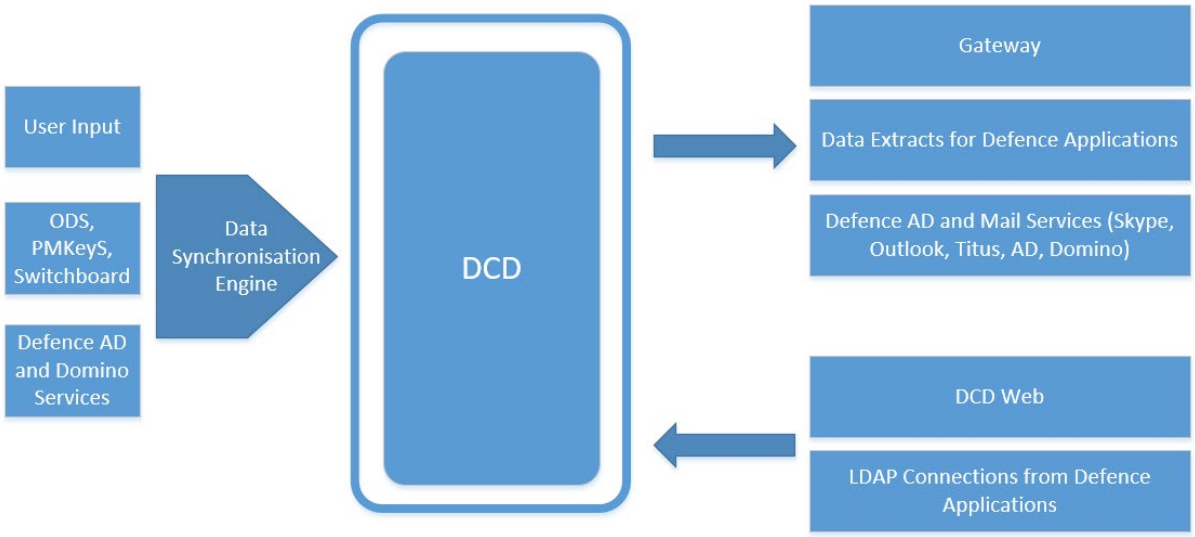

Figure 2: DCD Service Overview

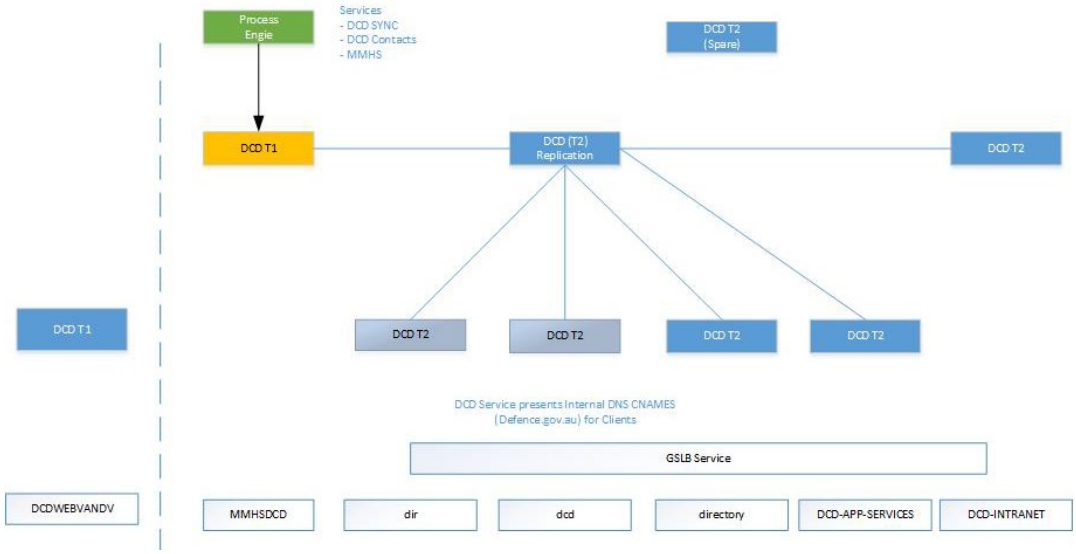

Figure 3: DCD Service Client Overview

5.2.2 The DCD Service utilises the DIODE Service to transfer data from low to high networks. The following table provides the DCD's list of External Clients:

High Side Systems	Low Side Systems
• Pegasus Directory Service covers the 5eyes partner nations (CAN, GBR, NZL, USA)	• DIXS Interface - NZDF

High Side Systems	Low Side Systems
• Secure Network Operating Committee (SNOC) covers other Australian Agencies. Examples are DFAT, Home Affairs and AFP. • Mission Partner Environment (MPE) • Defence Test & Evaluation Network (DTEN)	

Table 2: DCD External Clients

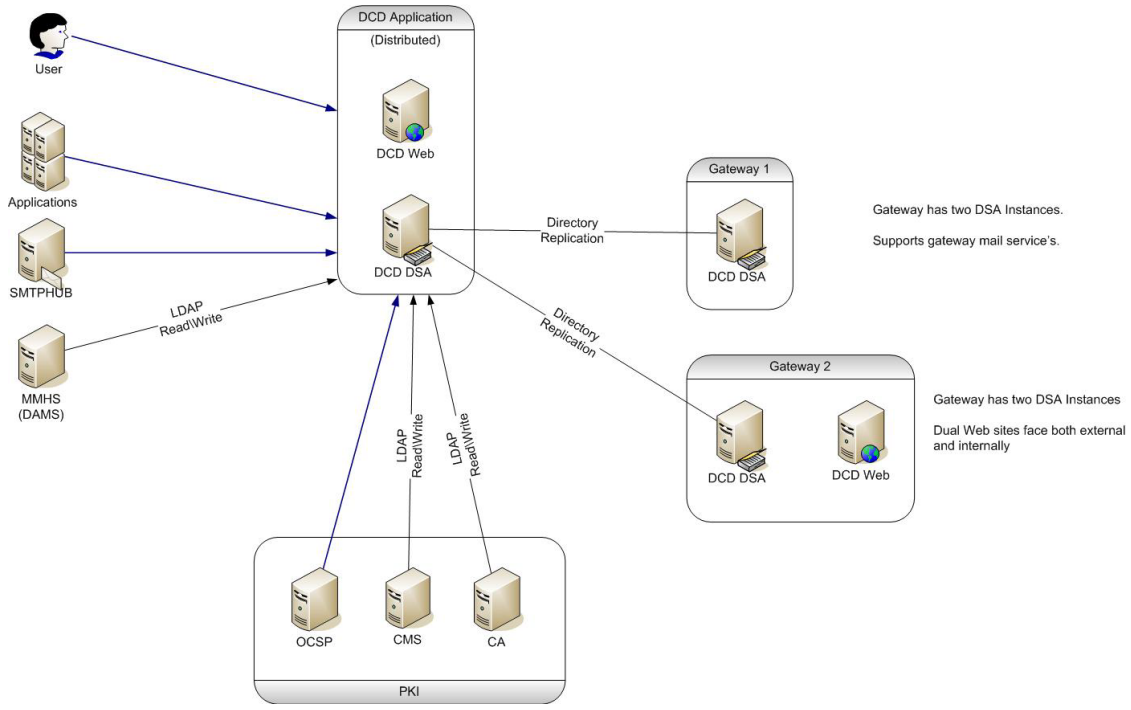

Figure 4: DCD Service Overview

5.2.3 The DCD Service has the following major components:

a. DCDDSA: x500 based directory service

b. DCDWEB: IIS based web frontend

c. Pegasus Directory Services: DSA Service shared with Pegasus Partners

d. DCD Content: how to manage the content with the Directory.

e. MMHS Support: Military Messaging.

5.2.4 The DCD DSA Service applies different levels of Access Control to manage access. The DCD Service provides a distributed structure, which consists of three levels of service. Note there are some variations for the different environments supported:

a. T1 DSA (Master) is the only point any changes can be made.

b. T1R DSA looks to manage replication from t1 to all subordinates.

c. T2 DSA (Slave) contains a full copy of the T1 master DSA content but are distributed around the Defence networks.

d. T3 DSA's holds a subset of the T1 DSA content which is required to meet their client's requirements. These DSA's tend to support Gateway services.

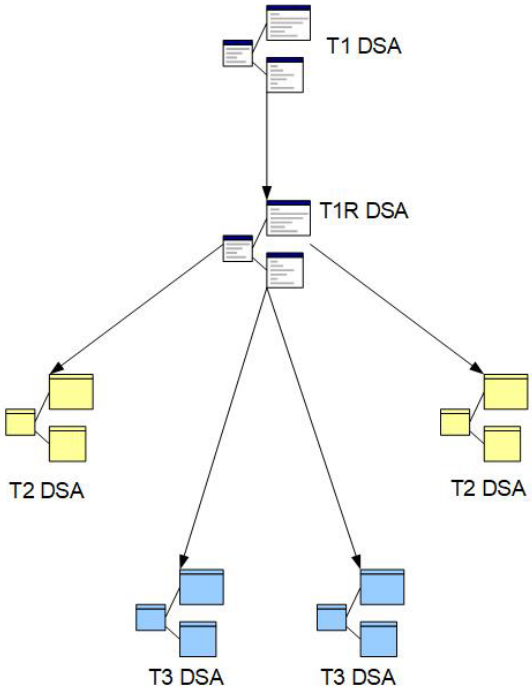

Figure 5: DCD Structure/Replication Overview

5.2.5 The DCD Service also provides a Distributed Website, which provides Defence users with a single search point for Defence Entities. The Directory Information Tree contains a number of arcs:

a. Location arc contains the Active Defence Users based on entries physical location.

b. Location Services arc contains Business Services (or Functional Entries).

c. Contacts arc contains entries for internal Australian Defence systems (mail domains).

d. Organisation arc contains the Australian Dept. of Defence Organisation View based on Department and Position Numbers.

e. OAA arc contains entries shared by other Australian agencies.

f. Coalition arc (not on all environments contains entries provided by Pegasus partners).

5.3 Pegasus Directory Service (PDS)

5.3.1 This covers the specific components of the DCD Service used to provide service to Pegasus Partners. This consists of two technical services:

a. Pegasus BDSA: DCD DSA Service with AUG Service presenting AUS content for Partners to read back into their national systems.

b. Pegasus Reader: This provide the AUS ability to read back partner's BDSA and update AUS Nation systems.

5.4 Data Exchange Service

5.4.1 This service covers a range of services that collect manipulate and publish into target system data. The target data format match client requirements:

a. DCD Content Process: This process will publish the aggregated authoritative Information into the DCD Service hosts.

b. Address Book Sync: This Data exchange covers the specifics on how the target mail systems contacts are updated from a variety of sources (Other exchange systems, Shares Files (CSV or LDIF), Directory (partner nation)). More information in 5.5.

c. User Information Provisioning Service: More information in 5.6.

d. Exchange Distribution Lists: This provides the ability to create dynamic Distribution Lists for groups of people using information not readily available in Active Directory. For example, all users of a certain employeeType at a certain location or organisation (i.e. ALL APS & ADF CASG).

e. Data Exchange – Database connections: This covers where database-to-database connections are used to share data either one or both ways.

f. Data Extracts: Providing files for clients. Includes the generation of the extract and delivery of the extract file to the client (Table 3, Figure 6).

D1	Clients collect from DDM FTP Site (deprecated)
D2	Clients collect for DDM FTPS Site
D3	CDMC Delivery to Client provide SMB/SFTP
D4	DDM Send extract as email attachment to client

Table 3: Data Exchange Delivery Options

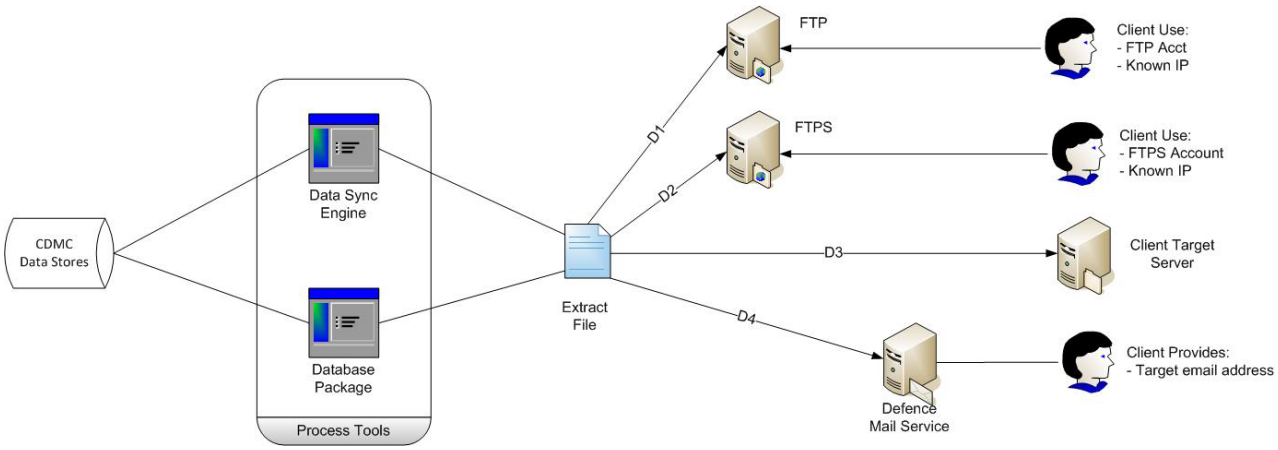

Figure 6: Data Exchange Overview

5.5 Address Book Sync (ABSYNC) Service

5.5.1 This service supports Defence wide mail by synchronisation of mail objects between internal and external mail systems. The service covers two significate capabilities:

a. Local address look up within the email client (Outlook and/or Notes) and;

b. Message release ability with Titus. The ABSYNC service reads the following source system's objects:

(i) Users

(ii) Groups (Group mailbox/Resource Mailbox)

(iii) Distribution Groups (was Distribution List)

5.5.2 The example service demonstrated in Figure 6 provides synchronised entries from source system into the required target systems as contacts entries.

a. Read from identified locations for each System

b. Writes into all target system contacts location entries for required source systems

5.5.3 Source/Target Systems can be:

a. Microsoft Active Directory (Exchange)

b. Directory

c. LDIF files

d. CSV Files

5.5.4 The diagram below shows an example for one System out to three targets:

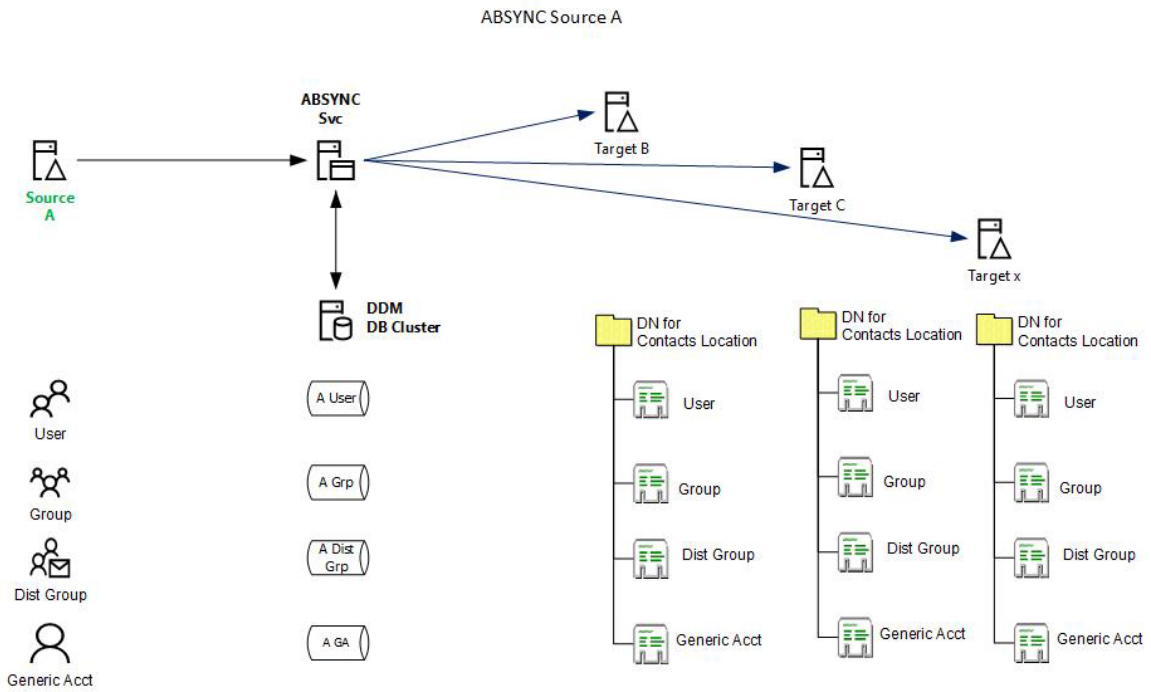

Figure 7: Example ABSYNC Service Overview

5.5.5 The diagram above shows for one Source Systems is written to multiple target systems. The source system may have any of the following entries managed:

a. User

b. Group

c. Distribution Group (Distribution Lists)

d. Generic Account (Not for all Source Systems)

5.5.6 For each Target System the Service will manage a contact folder of Source System Entries:

a. User

b. Group

c. Distribution Group

d. Generic Account

5.5.7 The Address book Sync Service primarily synchronises directory data between Mail Systems both inside Defence and with external Partners (Figure 2):

a. Defence Protected Environment (DPE)

b. Defence Science & Technology (DST)

c. Deployed Information Environment (DIE)

d. Fleet Information Environment (FIE)

e. Fleet Information System (FIS)

f. New Zealand Defence Force (NZL).

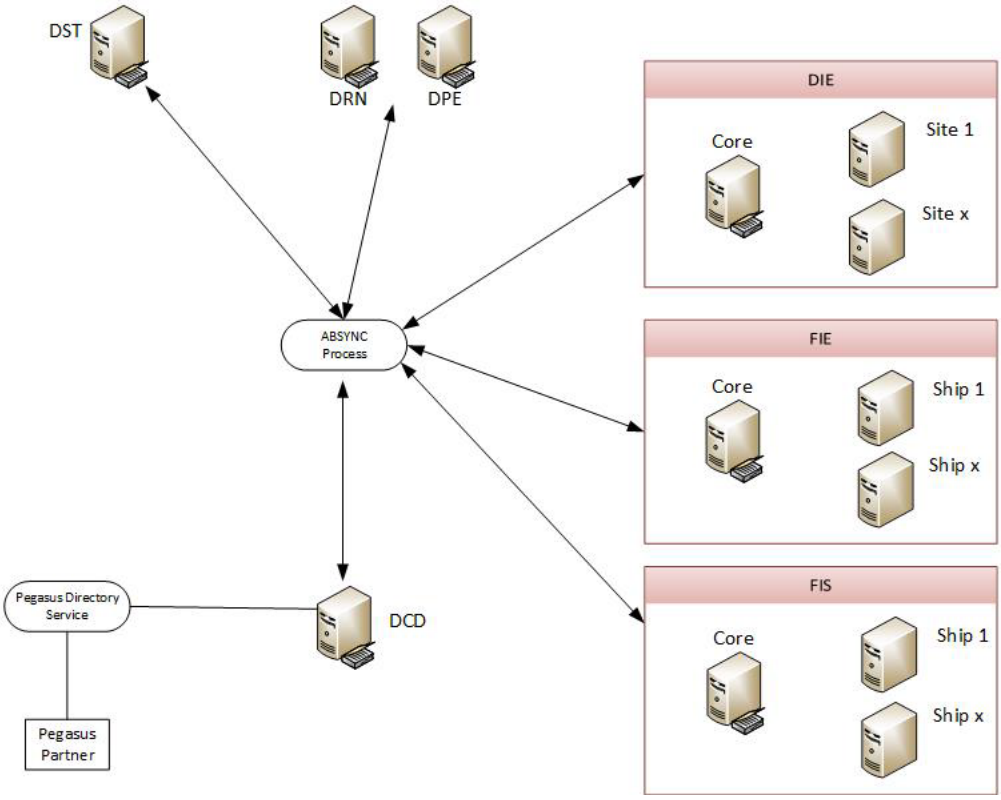

Figure 8: Defence ABSYNC Overview

5.6 User Information Provisioning (UIP) Service

5.6.1 User Information Provisioning is the update of an AD user object using information stored in the Defence Corporate Directory. This includes the following attributes:

a. Display Name

b. Title

c. Manager

d. Mobile Phone Number

e. Physical and Postal Address

f. Defence Unit or Directorate

g. Employee Number

h. Employee Type

i. Extension attributes for downstream synchronisations

5.6.2 This synchronisation runs multiple times a day to both the DRN and DPE domains on the PROTECTED network and DSN and DSE domains on the SECRET network.

5.7 AD List/group management (ADDL) Service

5.7.1 This provides the ability to create dynamic Distribution Lists for groups of people using information not readily available in Active Directory. For example, all users of a certain employeeType at a certain location or organisation (i.e. ALL APS & ADF CASG).

6. MONITORING AND CONTROL

6.1 Below is an approximation of statistics over 12 months for sustainment activities:

	DPE\External	DSE\AUG\External
Total users	160,000	50,000
Service Requests	221 requests via DSMS 539 EBDB requests ~250 CDMC Ops email requests	34 requests via DSMS
Incidents	116 requests via DSMS ~75 CDMC Ops email requests	393 requests via DSMS
Changes	27	13
Change tasks	360	22
Problems	1	3

Table 4: Sustainment Activity Statistics

Section 3 – Glossary

Term	Definition
ABSYNC	Address Book Sync
AD	Active Directory
ADF	Australian Defence Force
AGSVA	Australian Government Security Vetting Agency
APS	Australian Public Servant
ASA	Australian Submarine Agency
ASD	Australian Signals Directorate
AUG	Australian Capital Territory Unified Gateway
AUS	Australia
BDSA	Border Directory Service Agents
CASG	Capability Acquisition and Sustainment Group
CAN	Canada
CDMC	Certificate and Directory Management Centre
COTS	Commercial off the Shelf

Term	Definition
CP	Centralised Processing
CSV	Comma Separated Value
DAC	Direct Attach Copper
DAMS	Defence Formal Messaging Address Management System
DC	Domain Controller
DCD	Defence Corporate Directory
DCDWEB	Defence Corporate Directory Website
DDIS	Directorate of Digital Identity Services
DDM	Directory and Data Management
DIE	Deployed Information Environment
DNS	Domain Name System
DPE	Defence Protected Environment
DPEDEV	Defence Protected Environment Development
DPESIT	Defence Protected Environment Systems Integration Testing
DR	Disaster Recovery
DRN	Defence Restricted Network
DSA	Directory System Agent
DSE	Defence Secret Environment
DSEDEV	Defence Secret Environment Development
DSESIT	Defence Secret Environment Systems Integration Testing
DSMS	Defence Service Management System
DSN	Defence Secret Network
DST	Defence Science Technology
EBDB	Everybody Database
ESA	Email Security Appliance (Cisco)
ETOB	Enterprise Technology Operations Branch
FIE	Fleet Information Environment
FIS	Fleet Information System
FTP	File Transfer Protocol
Gateway	A device used to securely connect two different networks, especially two networks of different security classifications or threat levels
GBR	Great Britain
GSLB	Global Switch Load Balancer

Term	Definition
IB	Identity Bridge
LDAP	Lightweight Directory Access Protocol
LDAPS	Lightweight Directory Access Protocol over Secure Sockets Layer
LDIF	LDAP Data Interchange Format
MMHS	Military Messaging Handling System
MTBF	Mean Time between Failures
NPE	Non-Person Entity
NZL	New Zealand
ODS	Other Defence Staff
OS	Operating System
PDS	Pegasus Directory Services
RHEL	Red Hat Enterprise Linux
SIEM	Security Information and Event Management
SMTP	Simple Mail Transfer Protocol
SQL	Structured Query Language
SSIS	SQL Server Integration Services
UIP	User Information Provisioning
USA	United Stated of America
VLAN	Virtual Local Area Network